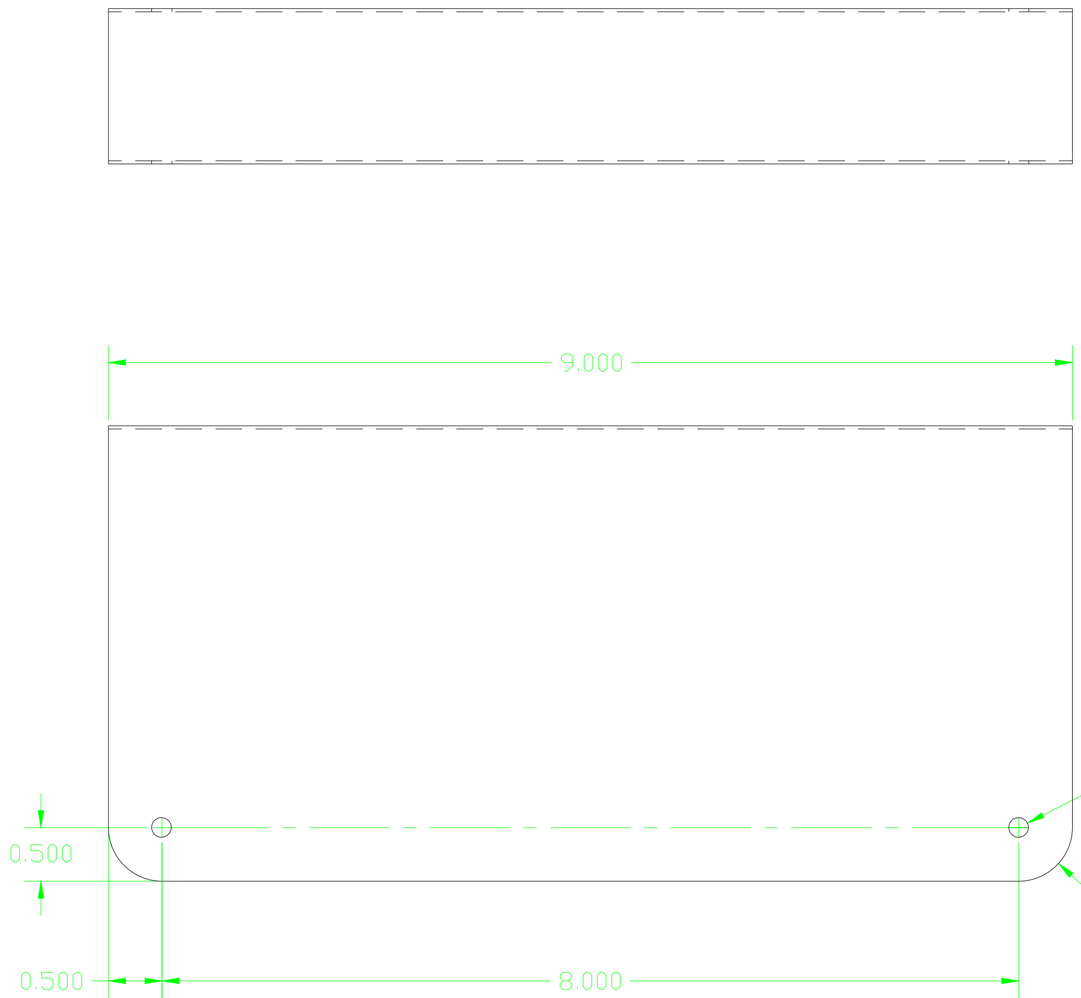

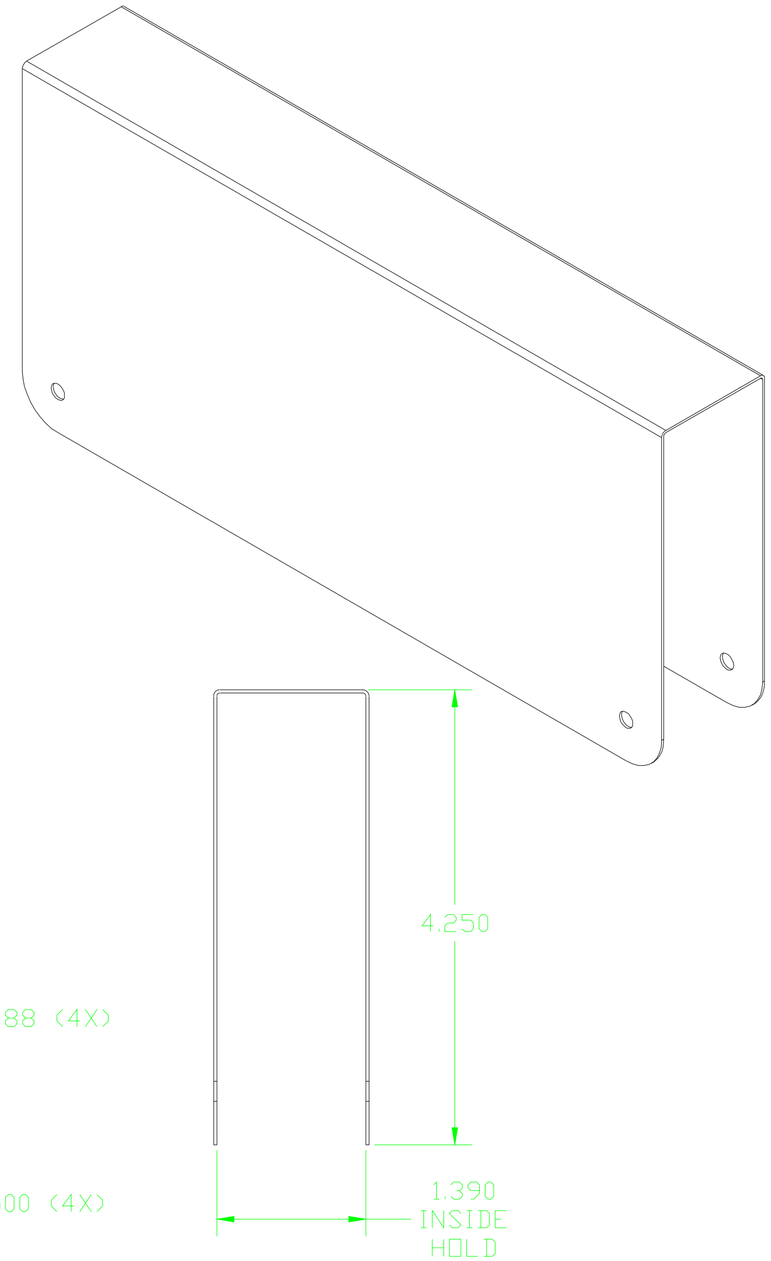

PRO-LOK®
655 North Hariton Street • Orange, CA • 92868
714.633.0681 / PRO-LOK.COM

ENTRY ARMOR by PRO-LOK

Item: **EWP-292**